PARTS MANUAL

Series 2560
Industrial Microscope

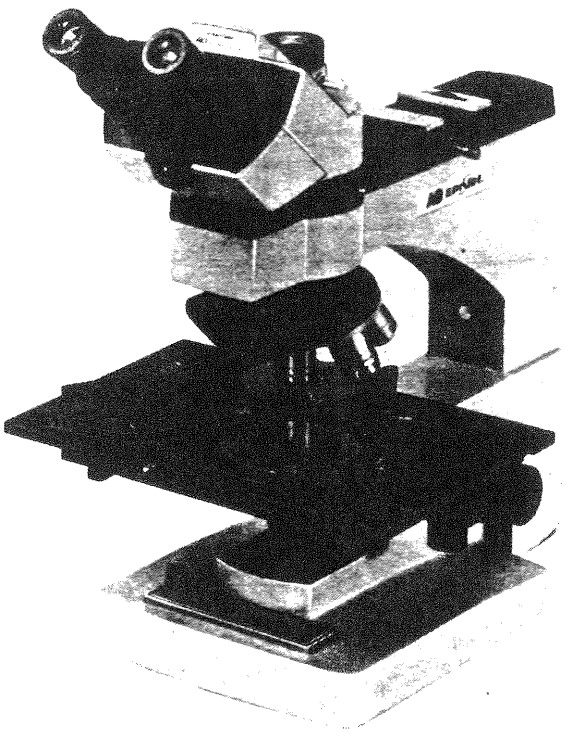

PARTS LISTS

This manual contains a listing of parts and illustrations for the Industrial Microscope.

The illustrations are used to identify and locate parts of the microscope, and are keyed to the parts lists by the use of index numbers. To order a part, identify and locate the part by using the illustrations. Note the index number for the part and cross-reference it to the parts list. The part number, description, and quantity required will be found opposite the index number.

In certain cases, it may be desirable to replace a complete assembly instead of overhauling or rebuilding with detail parts. Where complete assemblies are available, they are indicated by a note in the description column to show which parts they include. Detail parts of these assemblies are also available separately.

Parts or assemblies should be ordered directly from the AO Reichert Scientific Instruments plant at Buffalo, NY, or from any AO authorized dealer. When ordering parts, be sure to include a complete description, part number, and correct quantity.

This Parts Manual does not necessarily contain information on all changes that have occurred to the subject instrument since the manual's date of issue. It was prepared for the use of AO Reichert Scientific Instruments factory-trained service personnel who are kept up to date through a program of Service Bulletins and Training Seminars.

© AO Reichert Scientific Instruments 1983

AO Reichert™ Scientific Instruments
DIVISION OF WARNER-LAMBERT TECHNOLOGIES, INC.
P.O. Box 123, BUFFALO, NEW YORK 14240 U.S.A.

Price $1.00

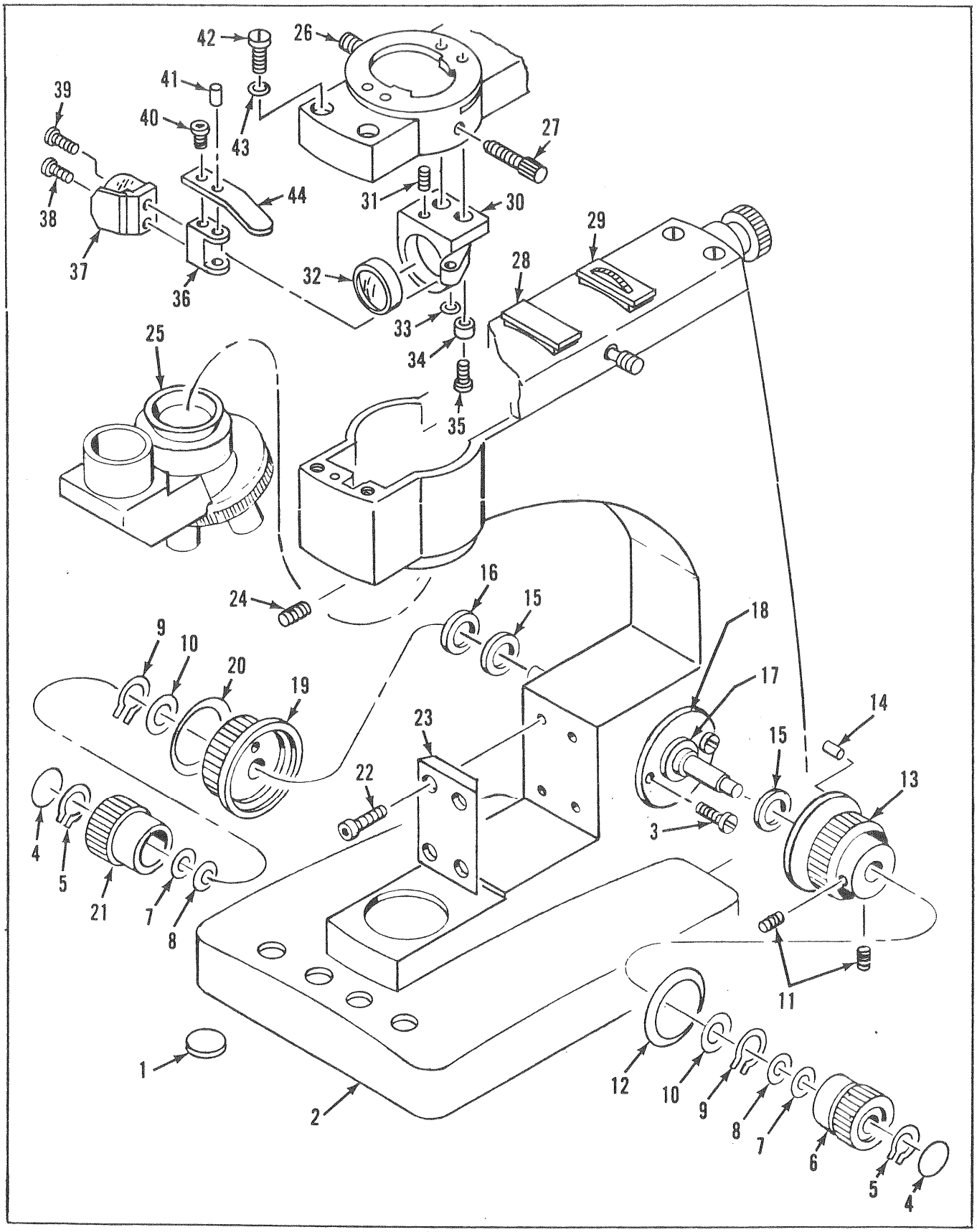

Stand No. 2560

Index No.	Part Number	Description	Qty Per Assy
1	2-52	Pad	4
2	1860-28	Frame	1
3	570-61	Screw	4
4	110-49	Disc	2
5	X-50792	Retaining Ring	2
6	140-3	Knob, F. A.	1
7	11330-180	Washer	2
8	X-50462	Spring Washer	2
9	X-50432	Retaining Ring	2
10	110-18	Spacer	AR
11	110-83	Screw	4
12	110-31	Knob Insert Ring	1
13	1860-41	Knob, C. A.	1
14	110-7	Pin	2
15	110-16	Washer	2
16	110-62	Spring Washer	1
17	110-15	Bearing	2
18	110-81	Bearing Adapter	2
19	140-6	Knob, C. A.	1
20	110-32	Knob Insert Ring	1
21	140-4	Plain Knob, F. A.	1
22	X-19448	Screw	4
23	1860-13	Dovetail	1
24	10-98	Screw	3
25	1860-853	Nosepiece	1
26	10-853	Lock Screw Assembly	1
27	X-20595	Screw	1
28	1879-51	Plug	1
29	1879-851	Filter Wheel Assembly	1
30	1879-14	Lens Mount	1
31	X-30030	Screw	1
32	1879-868	Cell and Lens Assembly	1
33	01224	Washer	1
34	1879-6	Bushing	2
35	X-25818-58	Screw	2
36	1879-17	Beam Splitter Hinge	1
37	1879-858	Beam Splitter, Mounted	1
38	1879-43	Screw	1
39	X-25826	Screw	1
40	X-38120	Screw	1
41	1879-12	Pin	1
42	X-19418	Screw	4
43	110-34	Washer	1
44	1879-11	Lever	1

Stand No. 2560

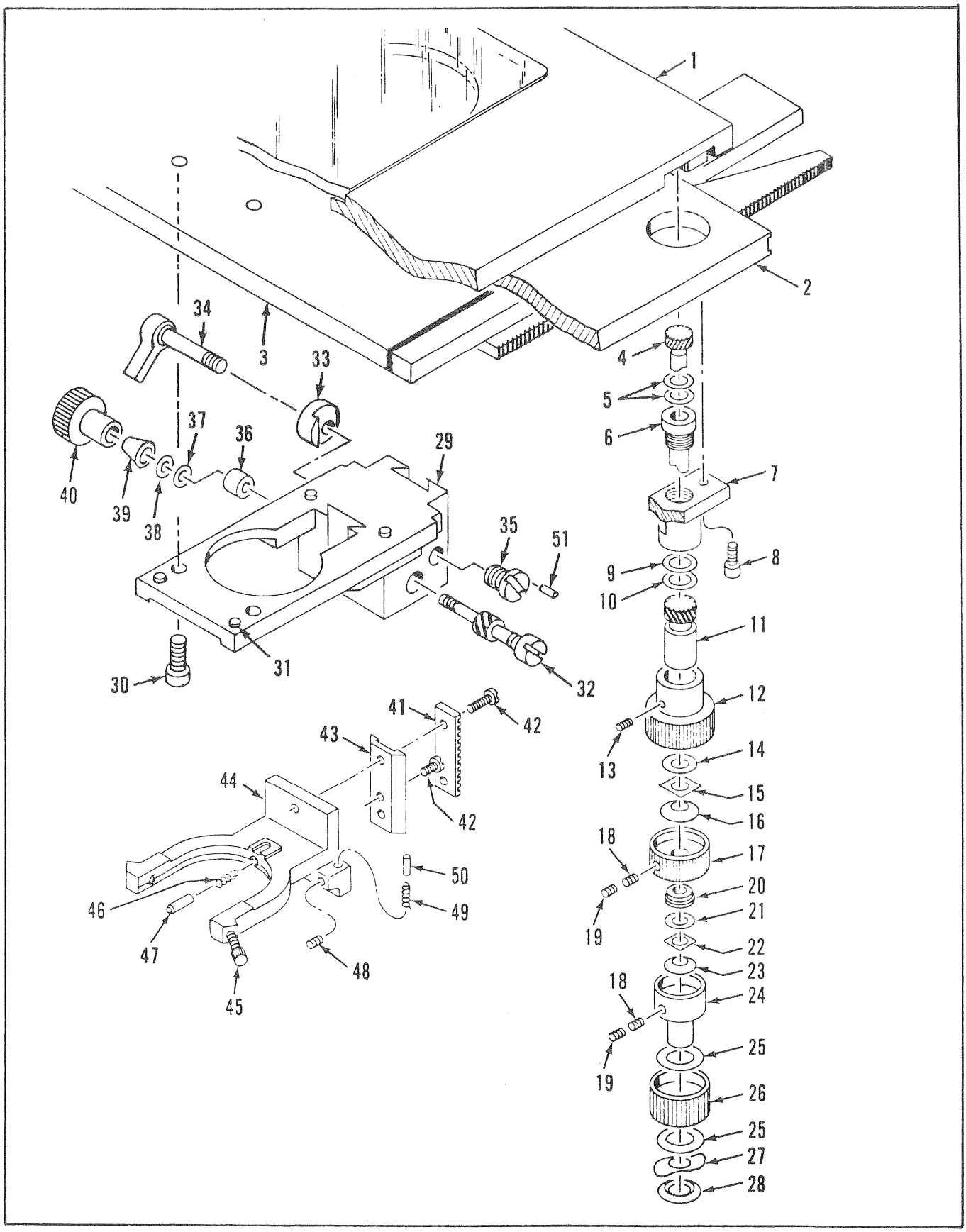

Stage Mount No. 2575G With No. 2576G Stage

Index No.	Part Number	Description	Qty Per Assy
1	1869-20	E/W Platen	1
2	1869-21	N/S Platen	1
3	1869-26	Mounting Platen	1
4	1194-33	Inner Pinion	1
5	1194-37	Washer	2
6	1194-34	Sleeve	1
7	1869-1	Mount	1
8	X-26106	Screw	2
9	1194-36	Washer	1
10	1194-38	Washer	1
11	1194-35	Outer Shaft	1
12	1194-40	Large Knob	1
13	X-36845	Screw	1
14	1534-33	Washer	1
15	1534-29	Square Washer	1
16	X-50584	Washer	1
17	1534-26	Adjusting Nut	1
18	1534-38	Nylon Plug	2
19	X-53538	Set Screw	2
20	1534-31	Washer	1
21	1534-34	Washer	1
22	1534-30	Square Washer	1
23	1062-76	Spring Washer	1
24	1534-48	Adjusting Nut	1
25	1534-36	Washer	1
26	1194-39	Small Knob	1
27	1534-37	Wave Washer	1
28	X-53447	Retaining Ring	1
29	2575-2	Stage Base	1
30	X-20072	Screw	4
31	X-30094-5	Screw	4
32	1194-853	Adjusting Pinion Assembly	1
33	2575-5	Slide Lock	1
34	1063-853	Locking Lever	1
35	1062-40	Screw	1
36	B-35-47	Pinion Bearing	1
37	01186-1	Washer	1
38	1062-60	Spacer	1
39	35-48	Thrust Bearing	2
40	1194-13	Knob	1
41	1062-57	Rack	1
42	0862-1	Screw	3
43	1873-3	Short GIB.	1
44	1873-9	Condenser Fork	1
45	1194-854	Centering Screw Assembly	2
46	1194-30	Spring	1
47	1194-28	Plunger	1
48	X-21306	Set Screw	1
49	B-12356	Spring	1
50	1194-27	Stop Pin	1
51	1062-61	Pin	1

Stage Mount No. 2575G With No. 2576G Stage

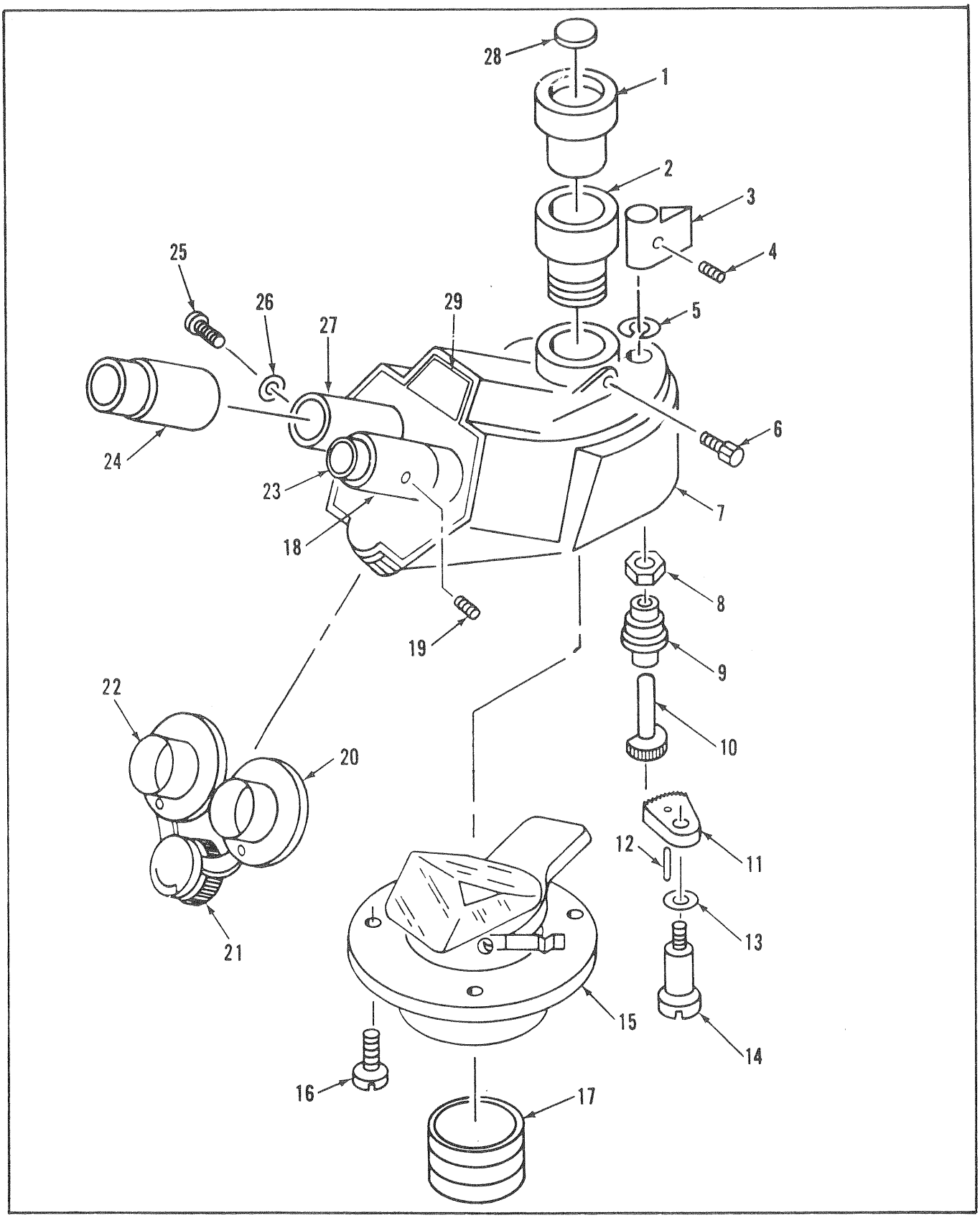

Trinocular Body No. 1103A

Index No.	Part Number	Description	Qty Per Assy
1	1103-11	Cap	1
2	1103-9	Adapter Camera	1
3	1135-852	Knob	1
4	X-20590	Set Screw	2
5	X-50820	Retaining Ring	1
6	1043-853	Screw	1
7	1103-2	Body, Trinocular	1
8	1043-64	Locknut	1
9	1043-63	Bushing	1
10	1103-7	Pinion	1
11	1103-6	Gear Sector	1
12	X-50763	Pin	1
13	X-53065	Washer, spring	1
14	1103-8	Shoulder Screw	1
15	1103-852	Adapter and Prism Assembly (Includes items 11-15)	1
16	1102-37	Screw	3
17	1102-851	Cell Assembly	1
18	1102-11	Eyetube, Fixed	1
19	X-25706	Set Screw	2
20	1102-21	Adapter, R.H.	1
21	1102-22	Knob, P.D.	1
22	1102-20	Adapter, L.H.	1
23	1102-7	Sleeve, fixed	1
24	1102-8	Sleeve, focusing	1
25	0281-22	Screw	1
26	1042-43	Key, focusing	1
27	1102-9	Eyetube, focusing	1
28	560-15	Disc	1
29	1102-31	Nameplate	1

Trinocular Body No. 1103A

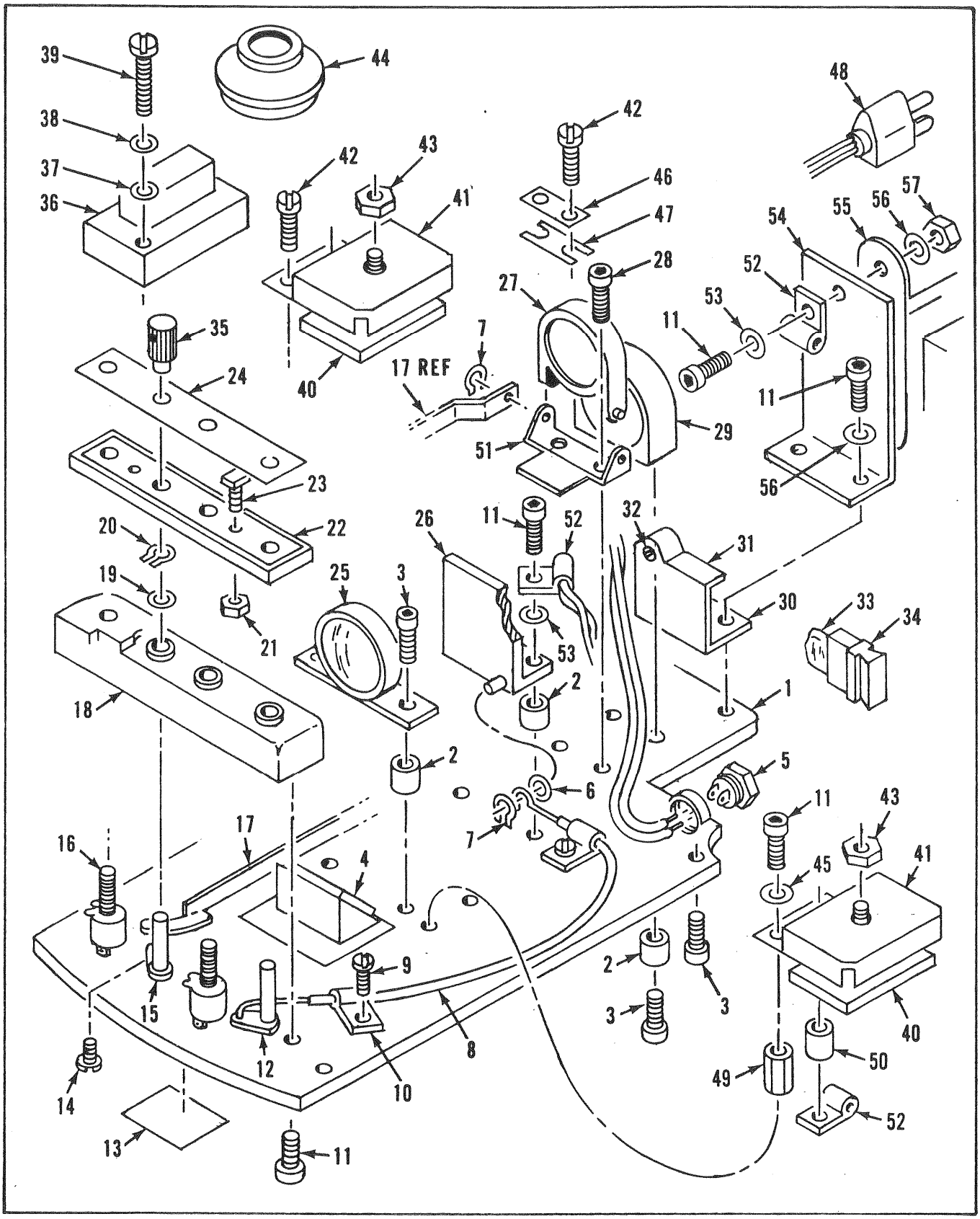

No. 2572 Power Supply With Illuminator – Transmitted/Incident Light
(Incident Illuminator Not Detailed)

Index No.	Part Number	Description	Qty Per Assy
1	1871-22	Illuminator Base	1
2	1130-49	Bushing	6
3	X-19400	Screw	9
4	1130-605	Mirror	1
5	1066-19	Jack	1
6	01030-1	Washer	1
7	X-50590	Ring	2
8	1130-34	Connector	1
9	X-53467	Screw	2
10	X-34325	Cable Clamp	3
11	X-19406	Socket Head Cap Screw	9
12	1130-860	Control Shaft Assembly	1
13	1871-37	Data Plate	1
14	1130-40	Dog Screw	1
15	1130-862	Control Shaft Assembly	1
16	1130-77	Control	2
17	1130-11	Filter Link	1
18	1871-34	Control Mount	1
19	X-53065	Spring Washer	2
20	X-50972	Retaining Ring	2
21	X-8081-2	Nut	2
22	1130-18	Control Cover	1
23	1130-28	Square Head Screw	2
24	1871-19	Control Plate	1
25	1130-851	Collimater Lens Mounted	1
26	1130-855	Iris Mount Assembly	1
27	1130-856	Filter Mount Assembly	1
28	X-34510	Screw	2
29	1130-853	Collector Lens Assembly	1
30	1130-857	Lamp Adapter Assembly	1
31	1130-21	Lampholder Bracket	1
32	X-34587	Screw	2
33	1120-1	Halogen Lamp for Transmitted Light	1
34	1130-858	Lamp Socket Assembly	1
35	1871-5	Knob	2
36	1130-30	Transformer	1
37	1130-79	Washer	1
38	X-16020	Washer	1
39	X-53566	Screw	2
40	1130-76	P. C. Board Assembly	2
41	1130-75	P. C. Board Cover	2
42	X-53110	Screw	5
43	X-8005	Nut	2
44	1130-850	Window & Mount Assembly	1
45	220-5	Washer	2
46	1130-44	Clamp	1
47	1130-53	Insulator	1
48	X-53034	Power Supply Cord	1
49	1871-20	Long Standoff	1
50	1871-31	Short Standoff	1

Continued on next page.

No. 2572 Power Supply With Illuminator

No. 2572 Power Supply With Illuminator (Cont.)

Index No.	Part Number	Description	Qty Per Assy
51	1130-54	Filter Bracket	1
52	X-36002	Cable Clamp	2
53	X-16015-1	Washer	2
54	1871-26	Bracket	1
55	655-4	Transformer	1
56	X-16309	Washer	4
57	X-8015	Nut	2

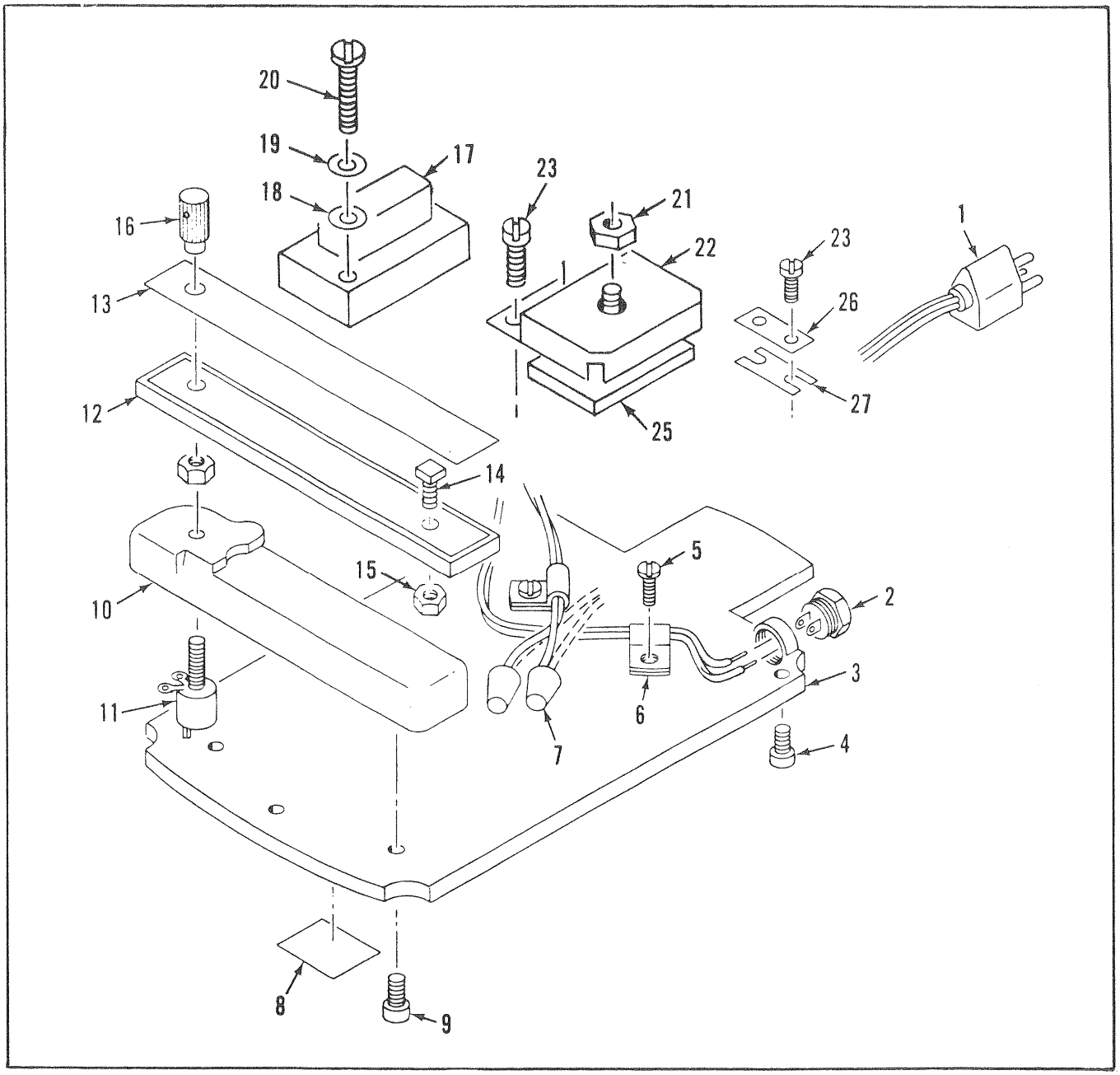

No. 2571 Power Supply – Incident Light Only

Index No.	Part Number	Description	Qty Per Assy
1	X-53034	Power Supply Cord	1
2	1066-19	Jack	1
3	1130-1	Illuminator Base	1
4	X-19400	Screw	4
5	X-53467	Screw	2
6	X-34325	Cable Clamp	2
7	X-51695	Wire Connector	2
8	2571-3	Data Plate	1
9	X-19406	Screw	3
10	1130-74	Control Mount	1
11	1130-77	Control	1
12	1130-18	Control Cover	1
13	1872-1	Control Plate	1
14	1130-28	Square Head Screw	2
15	X-8081-2	Nut	2
16	1871-5	Knob	1
17	1130-30	Transformer	1
18	1130-79	Washer	6
19	X-16020-1	Washer	2
20	X-53566	Screw	2
21	X-8005	Nut	1
22	1130-75	P. C. Board Cover	1
23	X-53110	Screw	5
24	Deleted		
25	1130-76	P. C. Board Assembly	1
26	1130-44	Clamp	1

No. 2571 Power Supply

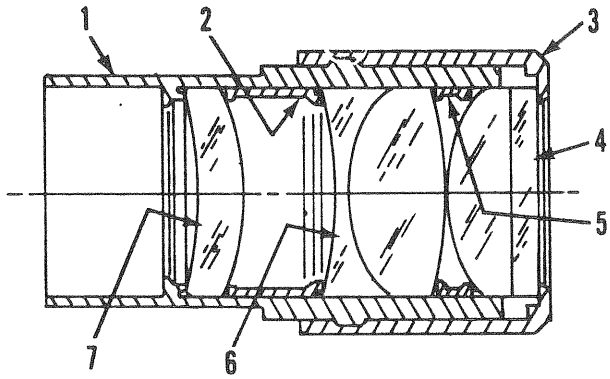

Cat. No. 172 — 10X Low Distortion Eyepiece

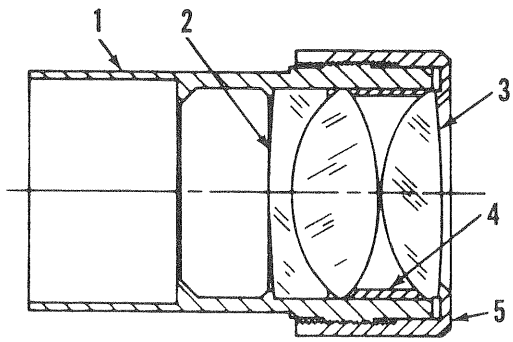

Cat. No. 184 — 15X Wide Field Eyepiece

Index No.	Part Number	Description	Qty Per Assy
		Cat. No. 172 — 10X Low Distortion Eyepiece	
1	172-5	Tube	1
2	172-6	Separator	1
3	172-4	Cap	1
4	172-704	Doublet	1
5	172-7	Separator	1
6	172-703	Doublet	1
7	172-609	Front Lens	1
		Cat. No. 184 — 15X Wide Field Eyepiece	
1	184-15	Tube	1
2	184-704	Doublet	1
3	184-613	Crown, single	1
4	184-16	Spacer	1
5	184-17	Cap	1

AO Reichert™ Scientific Instruments
DIVISION OF WARNER-LAMBERT TECHNOLOGIES, INC.
P.O. Box 123, BUFFALO, NEW YORK 14240 U.S.A.

2560 PM 8/83

Printed in U.S.A.